Rove Concepts

Linnea Outdoor Barstool

Escape from city life with this simple modern design. The lovely Linnea Outdoor Barstool is inspired by Scandinavian summers, with a natural minimalism that has the perfect touch of character. Constructed with performance fabric and a beautiful, sleek metal frame for longevity.

Also available in Outdoor Dining Chair here.

Details

- High performance aluminum frame
- Choose from black or white powder-coated aluminum frame
- Fade resistant powder coated finish
- UV resistant fabric seat
- Removable seat cushion

Dimensions

19.7 in x 22.3 in x 37.4 in (Width x Depth x Height)
All measurements are approximations.
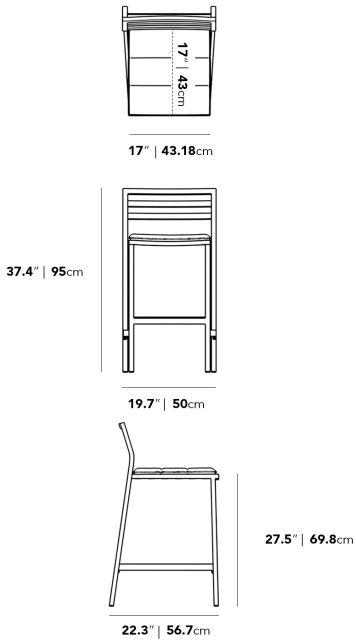
Assembly Instructions
Download